PRODUCT SPECIFICATION

REV A January 2010

Oscilent Controlled Document

Ordering Code / Part Number	Product Description
800-RF2462.5M-B	DMB, RF SAW Filter

Specification Contents

- Mechanical Dimensions
- Test Circuit
- Maximum Ratings
- Electrical Specification
- Frequency Performance
- VSWR
- Smith Chart

Notes

- Electrostatic Sensitive Device (ESD)
- Avoid excessive ultrasonic exposure
- Solderability compatible with JEDEC J-STD-020C Pb-free process, 260°C peak reflow temperature
- This product complies with EU directive 2002/95/EC (RoHS compliance)

Oscilent Corporation
Telephone: 1.949.252.0522
Fax: 1.949.252.0522
Email: sales@oscilent.com

Mechanical Dimensions (mm)

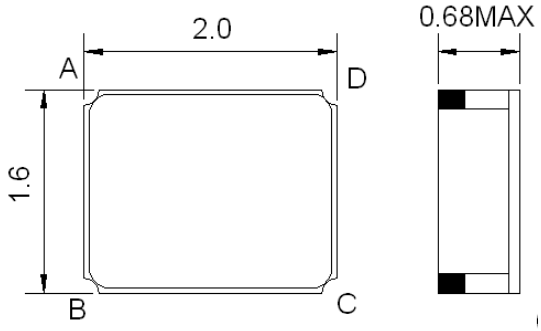

Pin Description	
A, C	Ground
B	In
D	Out

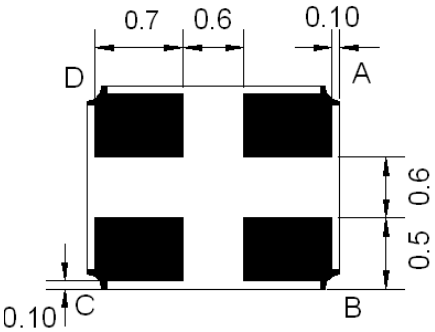

Test Circuit

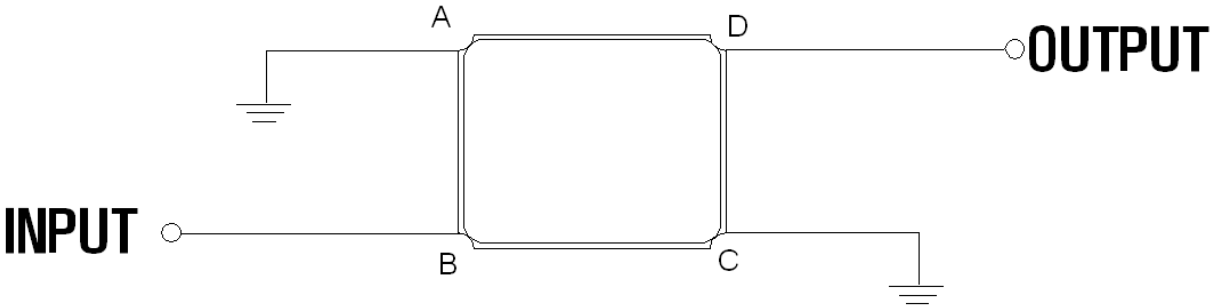

Source and Load Impedance: 50 Ω

Maximum Ratings

Parameters Description	Unit	Minimum	Typical	Maximum
Operating Temperature Range	°C	-30	-	+80
Storage Temperature Range	°C	-40	-	+85
Maximum DC Voltage	V	-	-	0.2
Maximum Input Power	dBm	-	-	0
Source Impedance (single ended)(1)	Ω	-	50	-
Load Impedance (single ended)(1)	Ω	-	50	-

Notes: No Matching Network (Ref. Testing Environment Circuit as shown above).

Electrical Specification

Parameters Description	Unit	Minimum	Typical	Maximum
Center Frequency (Fo)	MHz	-	2642.5	-
Insertion Loss within 2630.0 ~ 2655.0 MHz	dB	-	2.0	2.5
Amplitude Ripple within 2630.0 ~ 2655.0 MHz	dB_{p-p}	-	0.2	1.0
Attenuation:				
D.C. ~ 2400 MHz	dB	18	20	-
2400 ~ 2500 MHz	dB	28	30	-
2750 ~ 3500 MHz	dB	25	28	-
3500 ~ 6000 MHz	dB	30	32	-
VSWR within 2630.0 ~ 2655.0 MHz	-	-	1.3	2.0

Frequency Performance

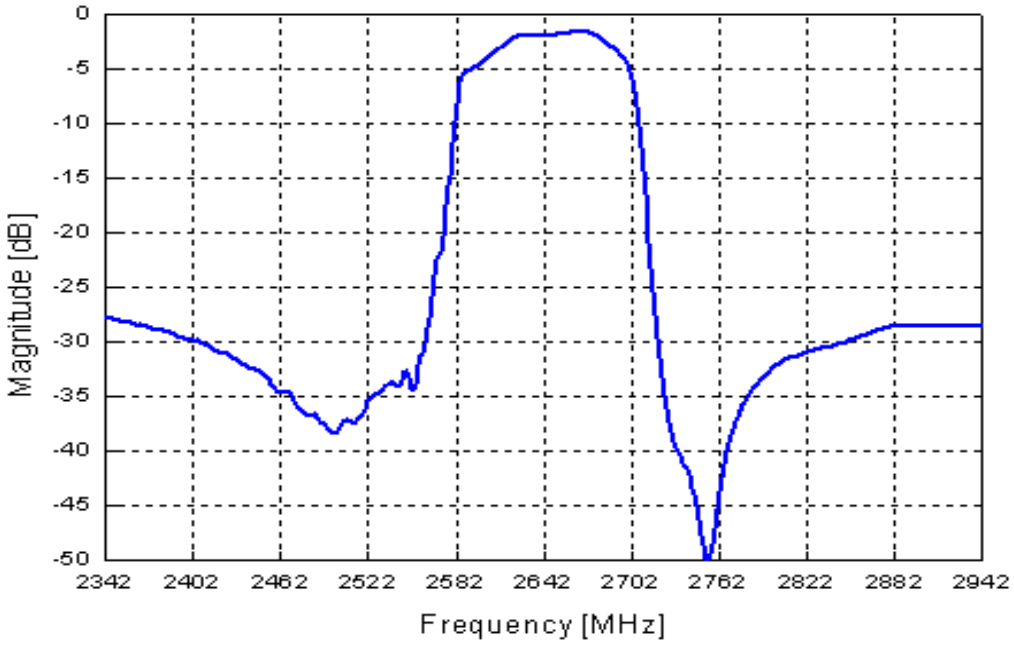

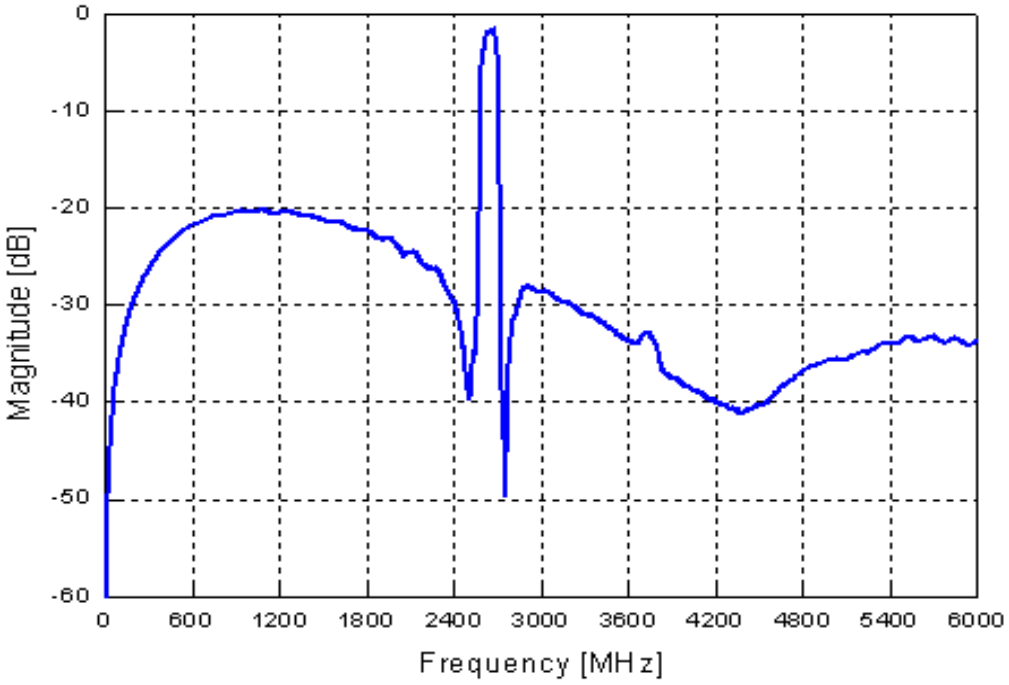

VSWR

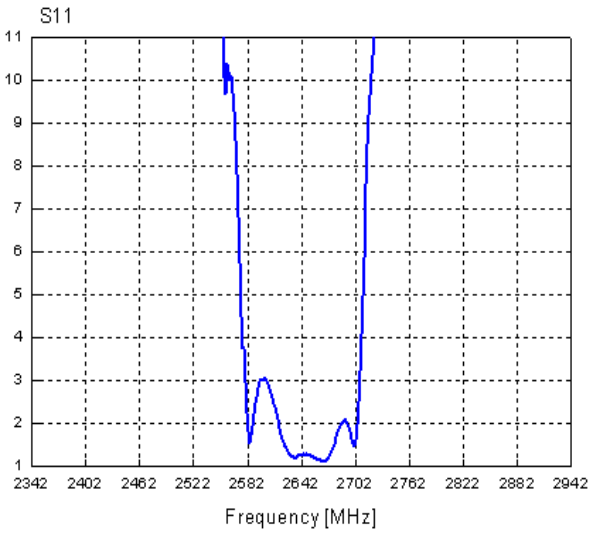

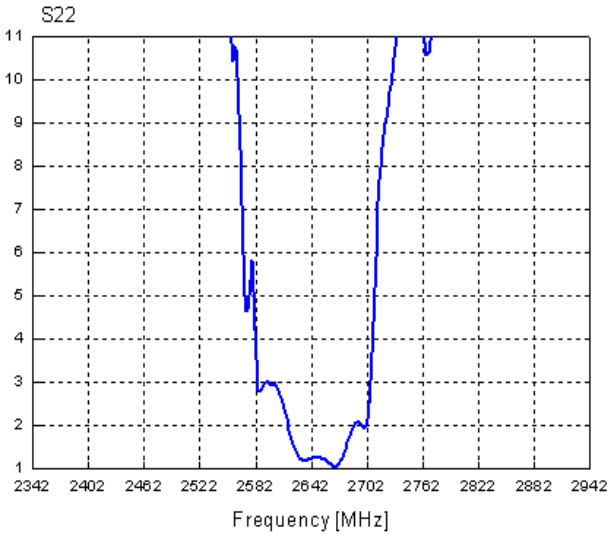
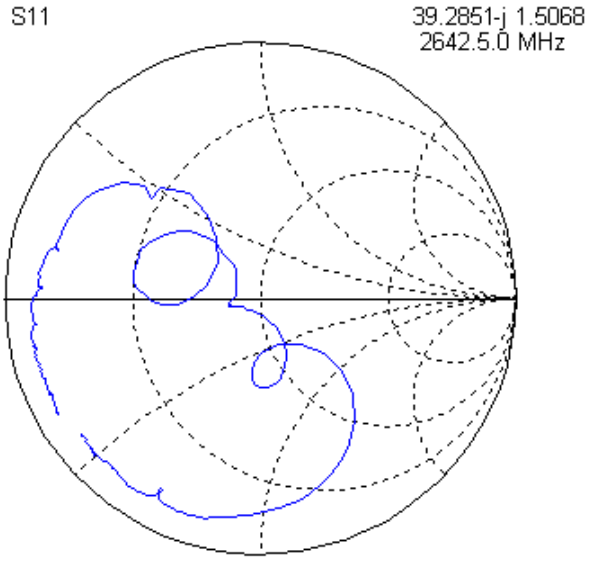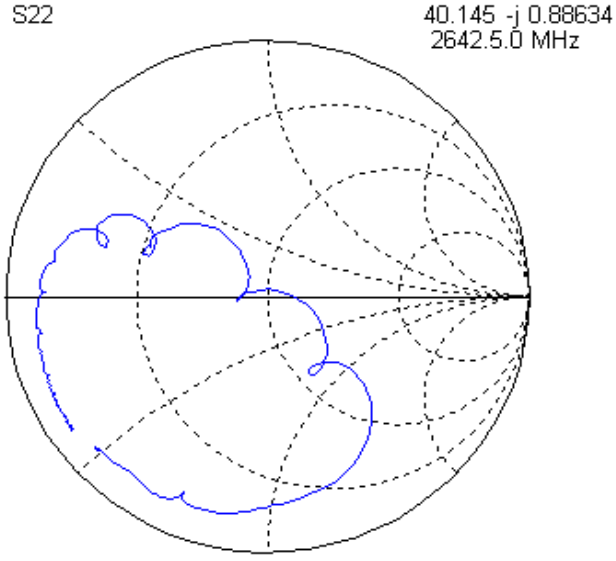
Smith Chart