PRODUCT SPECIFICATION

REV A January 2011

Oscilent Controlled Document

Ordering Code / Part Number	Product Description
827-IF140.0M-143A	140HMz IF SAW Filter 14.5 MHz Bandwidth

Specification Contents

- Mechanical Dimensions
- Test Circuit
- Maximum Ratings
- Electrical Specification
- Frequency Response

Notes

- Electrostatic Sensitive Device (ESD)
- Avoid excessive ultrasonic exposure
- Solderability compatible with JEDEC J-STD-020C Pb-free process, 260°C peak reflow temperature
- This product complies with EU directive 2002/95/EC (RoHS compliance)

Oscilent Corporation
Telephone: 1.949.252.0522
Fax: 1.949.252.0522
Email: sales@oscilent.com

Mechanical Dimensions (mm)

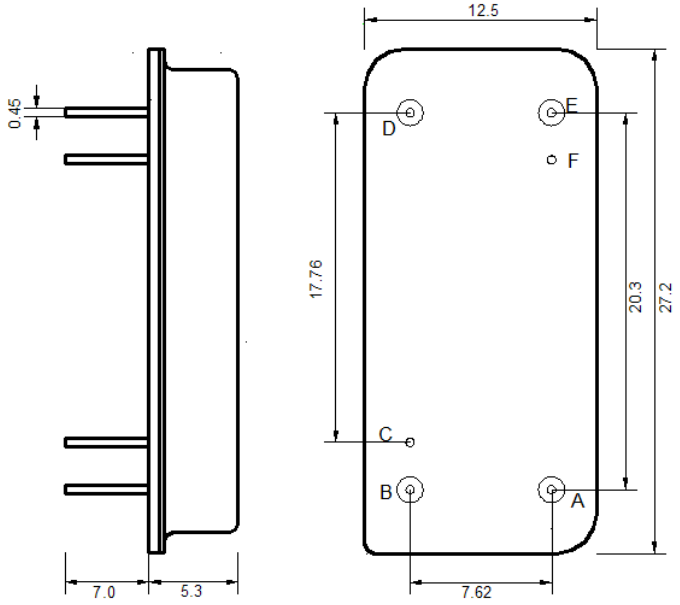

Pin Description	
B, C, D, F	Ground
A	Input
E	Output

Test Circuit

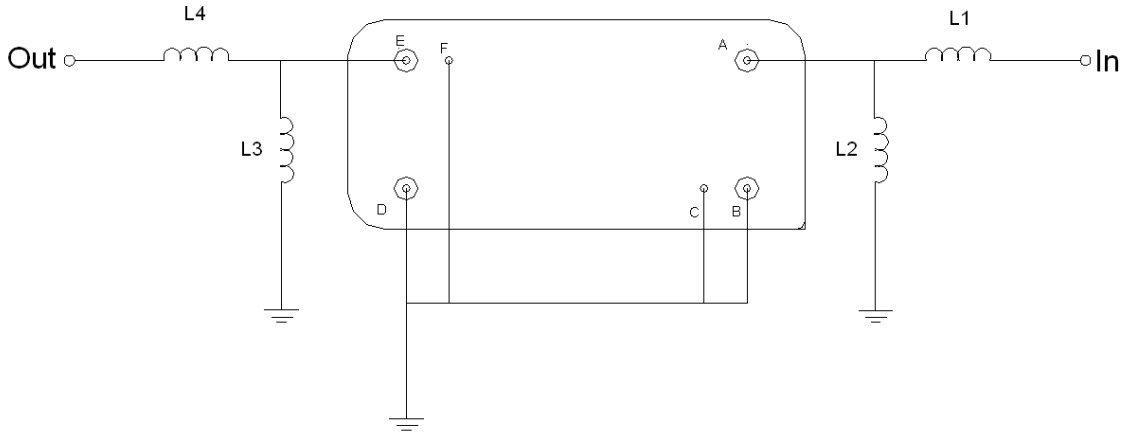

Test Fixture & Values	
Input	L1=56 nH, L2=56 nH
Output	L3=39 nH, L4=56 nH
Source/Load Impedance	50 Ω

Maximum Ratings

Parameters Description	Unit	Minimum	Typical	Maximum
Operating Temperature Range	°C	-30	-	+80
Storage Temperature Range	°C	-40	-	+85
Maximum DC Voltage	V	-	-	10
Maximum Input Power	dBm	-	-	10
Source Impedance (single ended)(1)	Ω	-	50	-
Load Impedance (single ended)(1)	Ω	-	50	-

Notes: With Matching Network (Ref. Testing Environment Circuit as shown above).
Those impedances could be modified with different impedance values and/or structures, if necessary.

Electrical Specification

Parameters Description	Unit	Minimum	Typical	Maximum
Center Frequency (Fo)	MHz	-	140.0	-
Insertion Loss at Fo	dB	-	27.0	28.0
Amplitude Ripple Variation (Fo ± 6.875 MHz)	dB_{p-p}	-	0.4	1.0
Group Delay Variation (Fo ± 6.875 MHz)	nsec	-	40	100
Absolute Delay at Fo	µsec	-	3.30	-
Temperature Coefficient	ppm/°C	-	-23	-
Bandwidth at –1.0 dB	MHz	-	14.30	-
Bandwidth at –3.0 dB	MHz	14.55	14.67	-
Bandwidth at –40.0 dB	MHz	-	16.20	16.30
Relative Attenuation				
Lower Sidelobe	dB	55	60	-
Upper Sidelobe	dB	55	60	-
Fc-8.5MHz	dB	60	65	-
Fc+8.5MHz	dB	60	65	-

Frequency Response

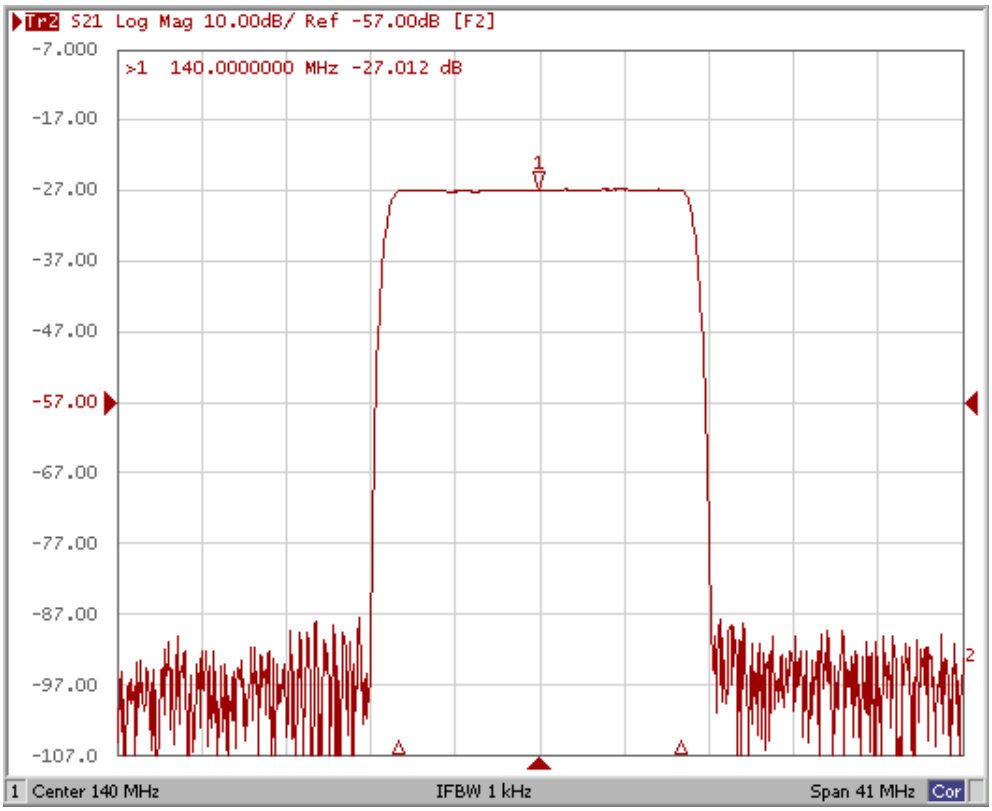

Ripple (Fo±6.875MHz)

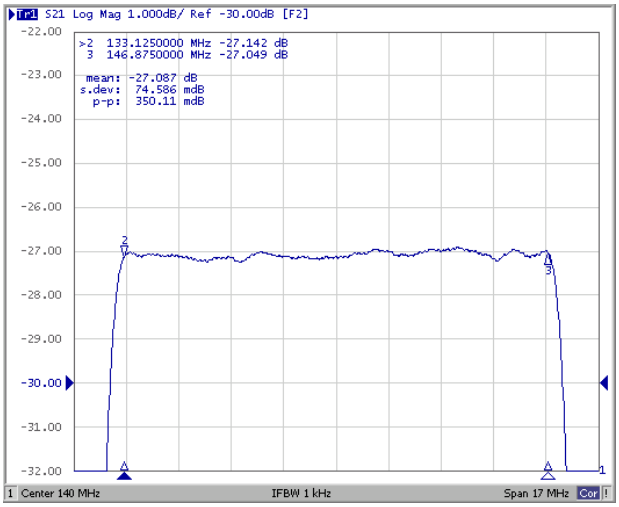

Group Delay (Fo±6.875MHz)

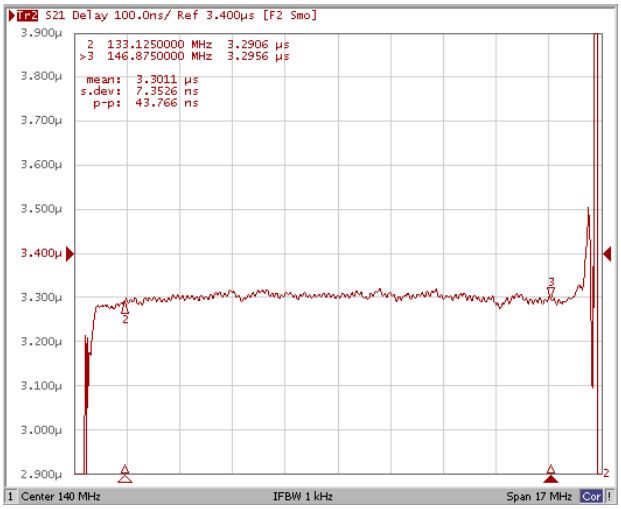
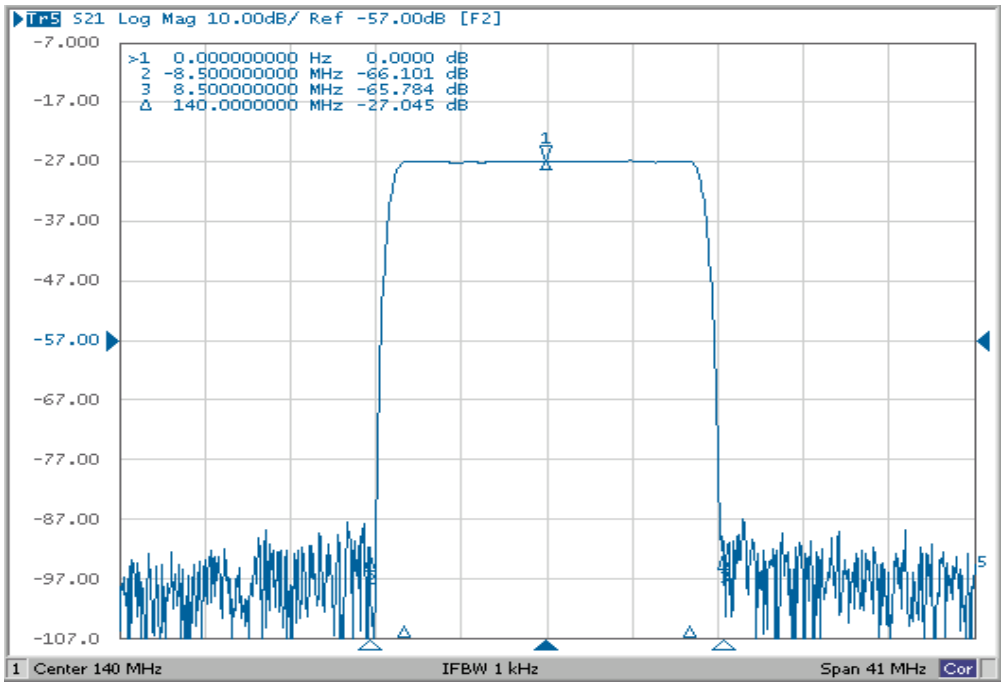
Out of Band-Gain (Fo±8.5MHz)